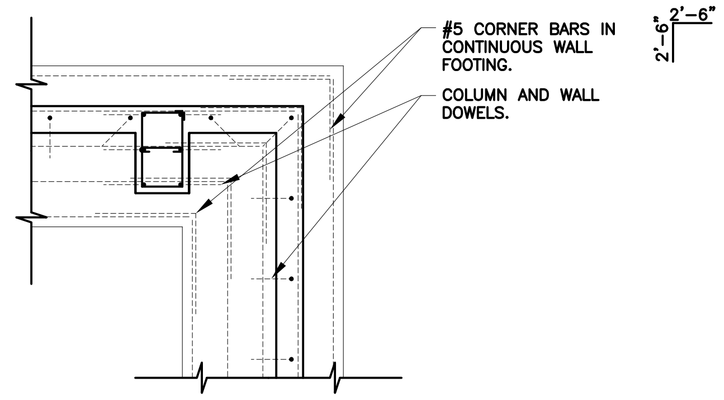

D2 DS 41 DETAIL
SCALE: 3/4" = 1'-0"

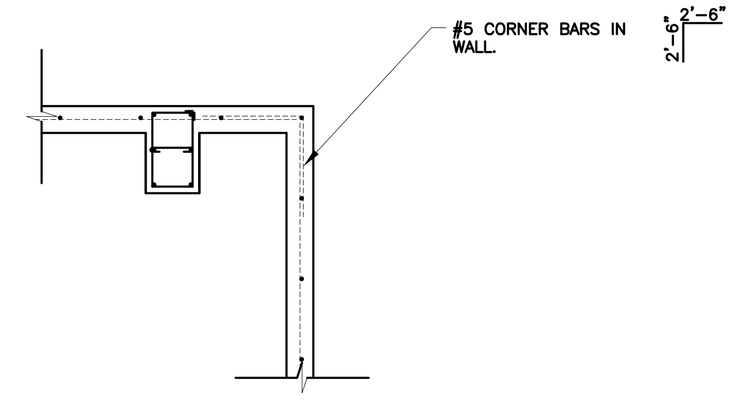

D3 DS 41 DETAIL
SCALE: 3/4" = 1'-0"

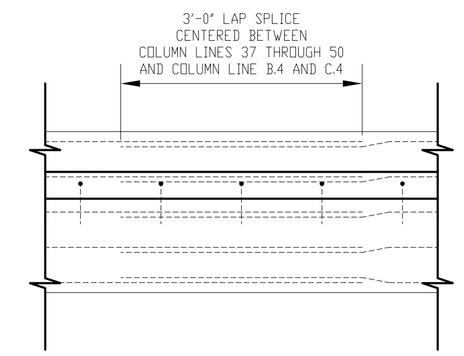

D4 DS 41 TYPICAL DETAIL
SCALE: 3/4" = 1'-0"

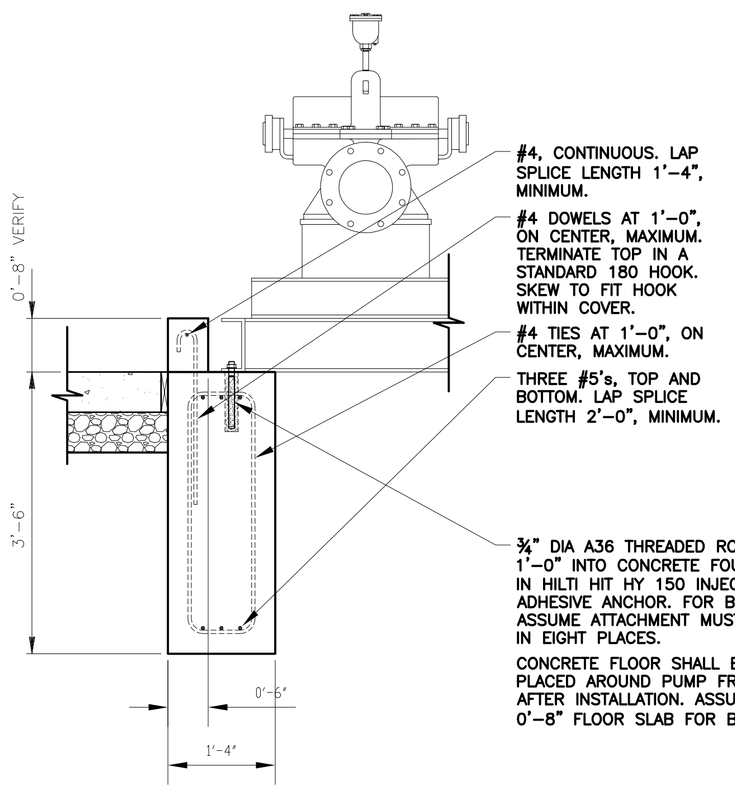

C1 DS 41 SECTION
SCALE: 3/4" = 1'-0"

DETAILS A1, A2, AND C1 REQUIRE COORDINATION WITH SPECIFIC EQUIPMENT PURCHASED, THUS, THE NOTES TO VERIFY DIMENSIONS ARE PROVIDED AS REMINDERS OF THIS FACT.

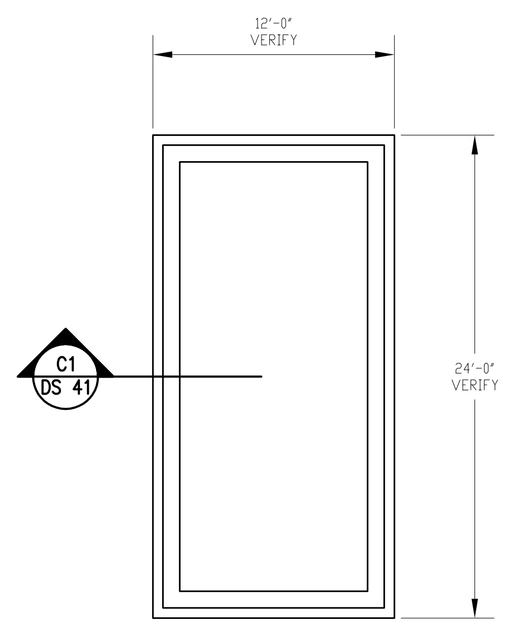

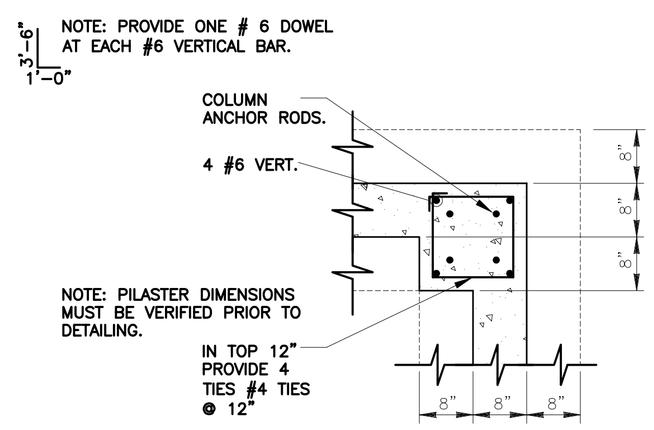

B3 DS 41 SECTION
SCALE: 3/4" = 1'-0"

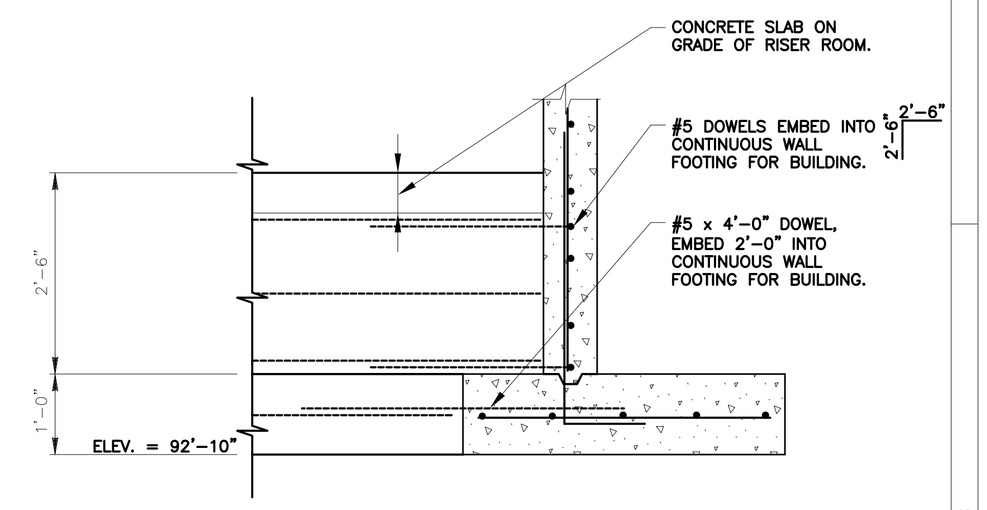

B4 DS 41 SECTION
SCALE: 3/4" = 1'-0"

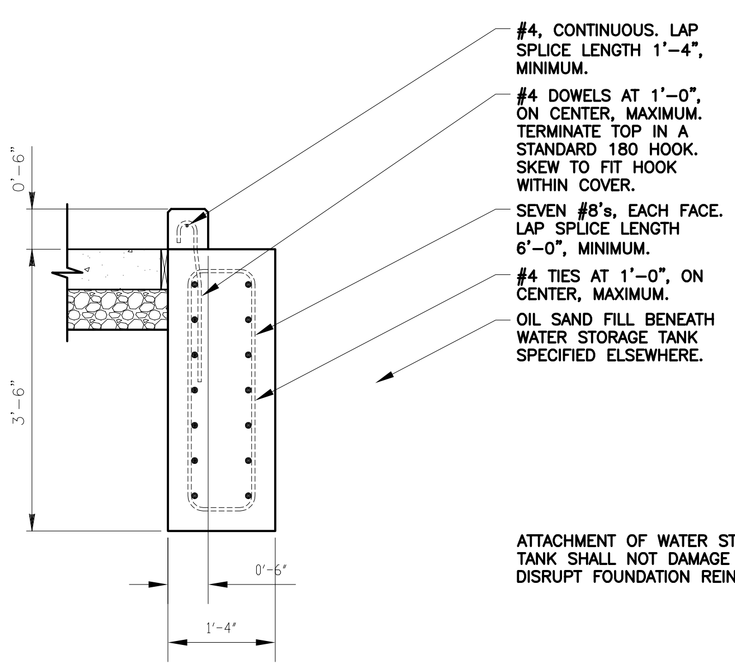

A1 DS 41 SECTION
SCALE: 3/4" = 1'-0"

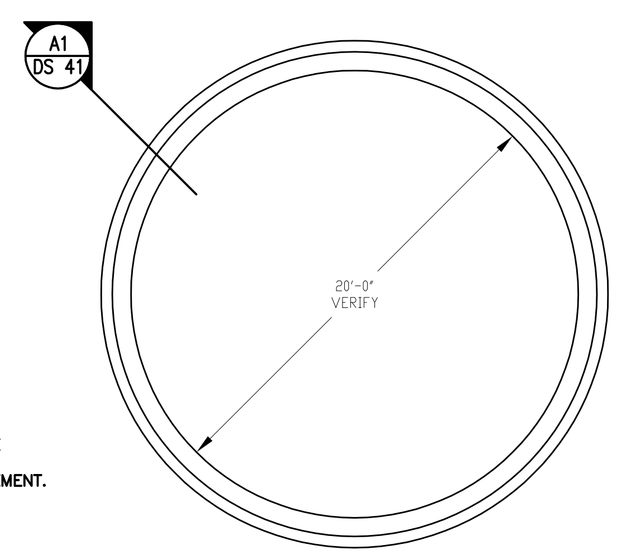

A2 DS 41 PLAN – WATER STORAGE TANK / PUMP HOUSE
SCALE: 1/4" = 1'-0"

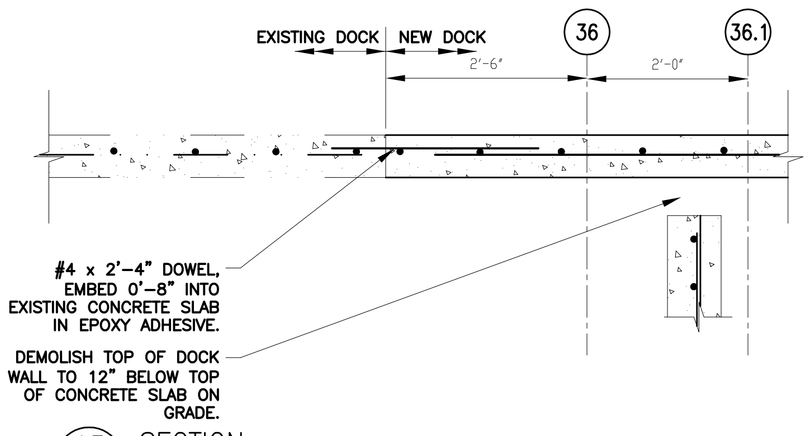

A3 DS 41 SECTION
SCALE: 3/4" = 1'-0"

DATE	REV	DESCRIPTION	BY
05/24/06	1	BID/PERMIT SET	MV
05/17/06		NINETY-FIVE PERCENT REVIEW	MV

BID PERMIT SET

DESIGNER: AE STRUCTURES
ARCHITECTURALLY ENGINEERED STRUCTURES, PLLC
1118 JOSHUA DRIVE
TROY, MICHIGAN 48098-6507
TELEPHONE: 248.828.7264 FACSIMILE: 248.828.7265

PROJECT NO:JHN-2006-05

OWNER: CON-WAY TRANSPORTATION SERVICES
110 PARKLAND PLAZA ANN ARBOR, MI 48103
PHONE: (734) 769-0203 FAX: (734) 214-5653

PROJECT: COLDWATER SERVICE CENTER XCW
6755 N OLD 27
FREMONT, INDIANA 46737

SHEET: STRUCTURAL MISCELLANEOUS DETAILS

NUMBER: DS 41