THIS DOCUMENT AND THE SUBJECT MATTER CONTAINED THEREIN IS PROPRIETARY AND IS NOT TO BE USED OR REPRODUCED WITHOUT PRIOR WRITTEN APPROVAL

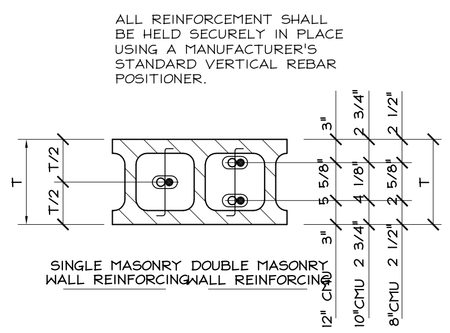

12 Typical Masonry Wall Reinforcement Detail
S4-1 Scale: Not to Scale
Detail: AES4-10-101

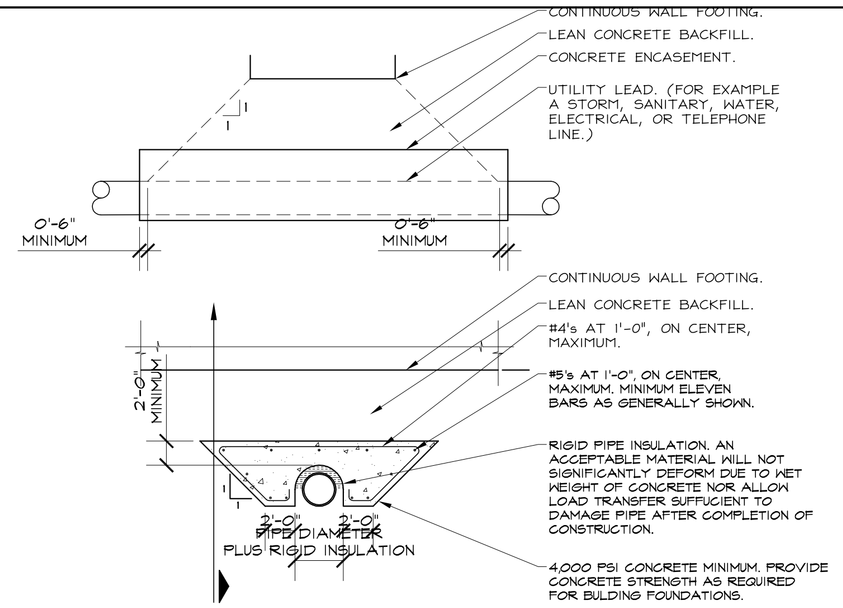

Typical Building Utility Lead Protection Requirement Detail
9 S4-1 Scale: Not to Scale
Detail: AES-3300-032

UTILITY LEAD PLACED AFTER BULDING FOUNDATION OR WHERE DEPTH OF ENGINEERED BACKFILL MAY NOT ALLOW FOR ADEQUATE COMPACTION.

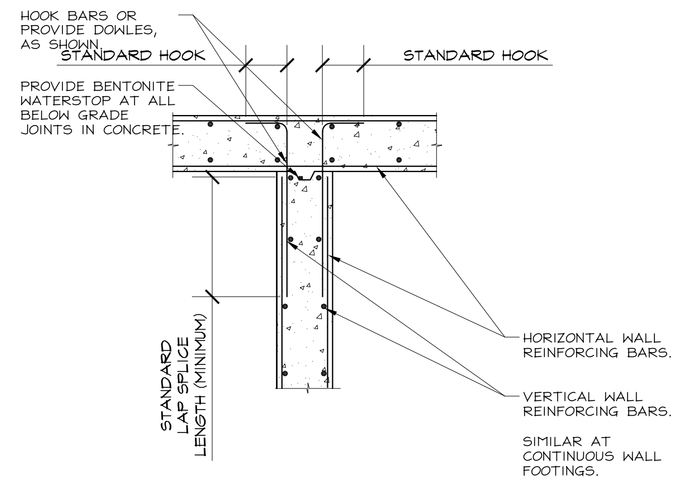

Typical Additional Reinforcement Requirements For Concrete Wall and Continuous Wall Footing Intersections
6 S4-1 Scale: Not to Scale
Detail: AES-3300-124

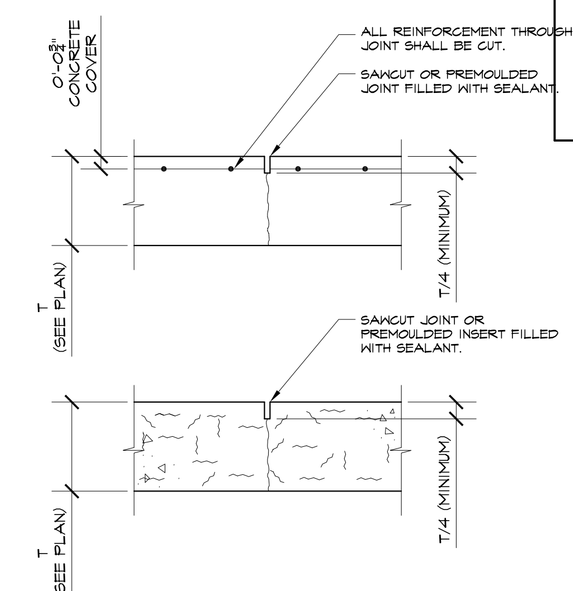

Typical Slab on Grade Contraction Joint Detail
3 S4-1 Scale: Not to Scale
Detail: AES-3300-103

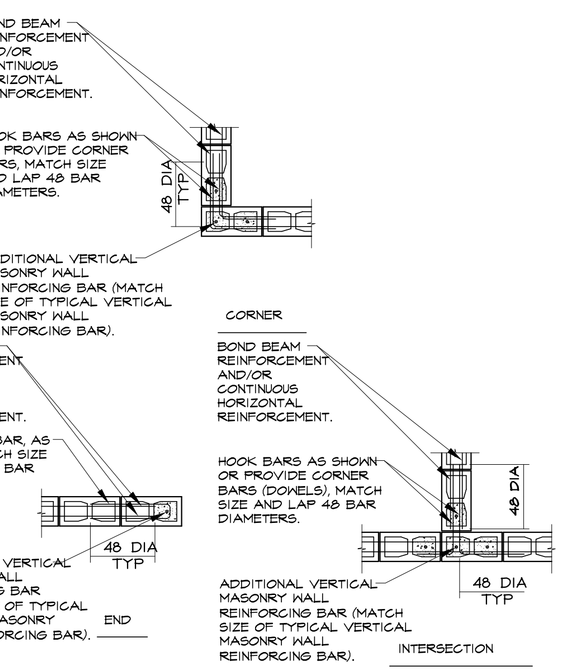

NOTES:

1. UNLESS OTHERWISE NOTED OR SPECIFIED, AT CORNERS AND INTERSECTIONS OF CONCRETE MASONRY WALLS SHALL BE CONSTRUCTED BY PLACING ONE HALF OF UNITS INTO THE OTHER MASONRY WALL WITH THE ALTERNATE UNITS HAVING A BEARING OF NOT LESS THAN FOUR INCHES ON THE UNIT BELOW.

2. UNLESS OTHERWISE NOTED OR SPECIFIED, PROVIDE DOWELS FROM CONCRETE FOOTING OR WALL BELOW WITH SAME SIZE AND SPACING AS VERTICAL BARS AT LEVEL BELOW. LAP FORTY-EIGH BAR DIAMETERS MINIMUM, UON.

Typical Masonry Wall Additional Reinforcment Requirement Detail
11 S4-1 Scale: Not to Scale
Detail: AES4-10-102

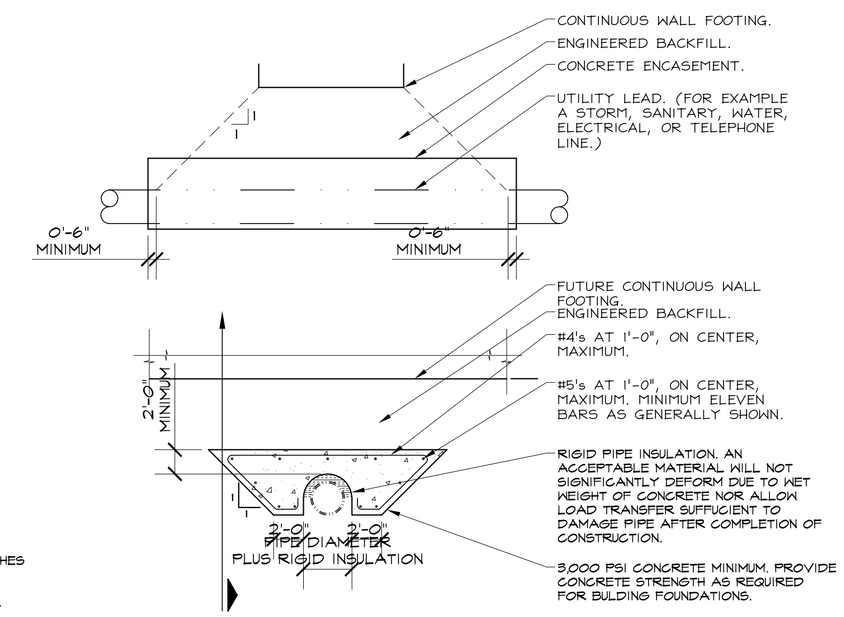

Typical Building Utility Lead Protection Requirement Detail
8 S4-1 Scale: Not to Scale
Detail: AES-3300-031

EXISTING UTILITY LEAD OR UTILITY LEAD PLACED PRIOR TO BULDING FOUNDATIONS.

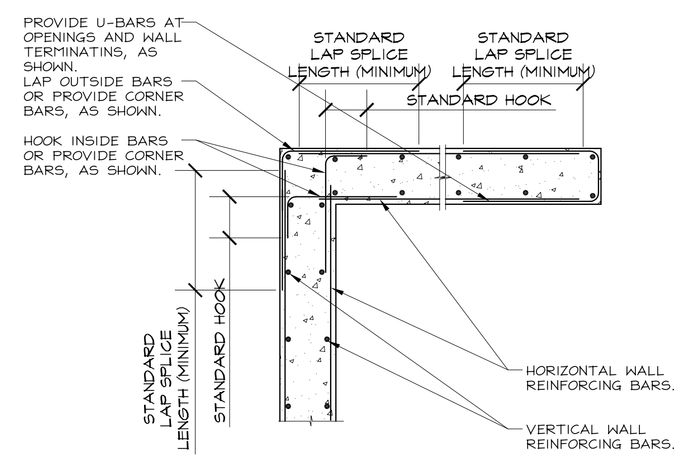

U-BAR AND CORNER BARS SHALL MATCH HORIZONTAL REINFORCEMENT'S SIZE AND SPACING (OR QUANTITY).

Typical Additional Reinforcement Requirements For Concrete Wall and Continuous Wall Footing Corners, Terminations, and Openings
5 S4-1 Scale: Not to Scale
Detail: AES-3300-123

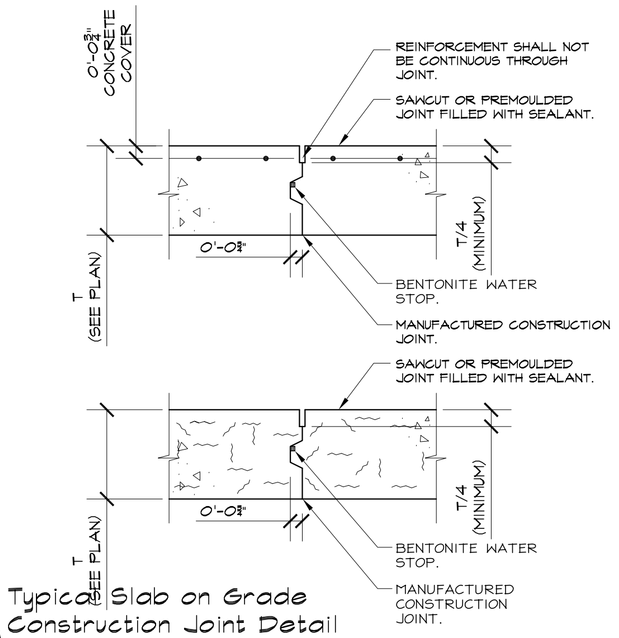

Typical Slab on Grade Construction Joint Detail
2 S4-1 Scale: Not to Scale
Detail: AES-3300-102

TO ATTAIN THE SPECIFIED FLOOR COVERINGS, AND ASSOCIATED WARANTEES, THE VAPOR BARRIER MUST BE PLACED DIRECTLY BENEATH THE CONCRETE SLAB ON GRADE. PLACING THE VAPOR BARRIER AT THIS LOCATION INCREASES THE POTENTIAL FOR "CURLING." NOTE: THE POTENTIAL FOR CURLING DOES NOT MEAN CURLING WILL OCCUR. THE CONTRACTOR SHALL RECOGNIZE THIS AND PLAN AND PLACE AND CURE THE CONCRETE SLAB ON GRADE IN SUCH A WAY AS TO ELIMINATE CURLING. CURLED SLABS ARE SUBJECT TO REMOVAL AND REPLACEMENT.

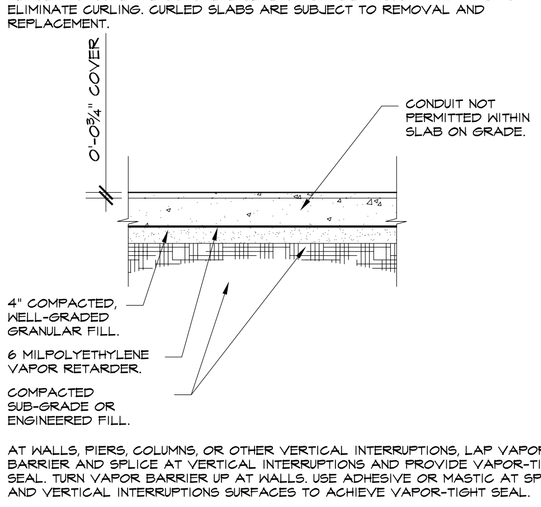

AT WALLS, PIERS, COLUMNS, OR OTHER VERTICAL INTERRUPTIONS, LAP VAPOR BARRIER AND SPLICE AT VERTICAL INTERRUPTIONS AND PROVIDE VAPOR-TIGHT SEAL. TURN VAPOR BARRIER UP AT WALLS. USE ADHESIVE OR MASTIC AT SPLICES AND VERTICAL INTERRUPTIONS SURFACES TO ACHIEVE VAPOR-TIGHT SEAL.

Typical Slab on Grade Detail
1 S4-1 Scale: Not to Scale
Detail: AES-3300-101

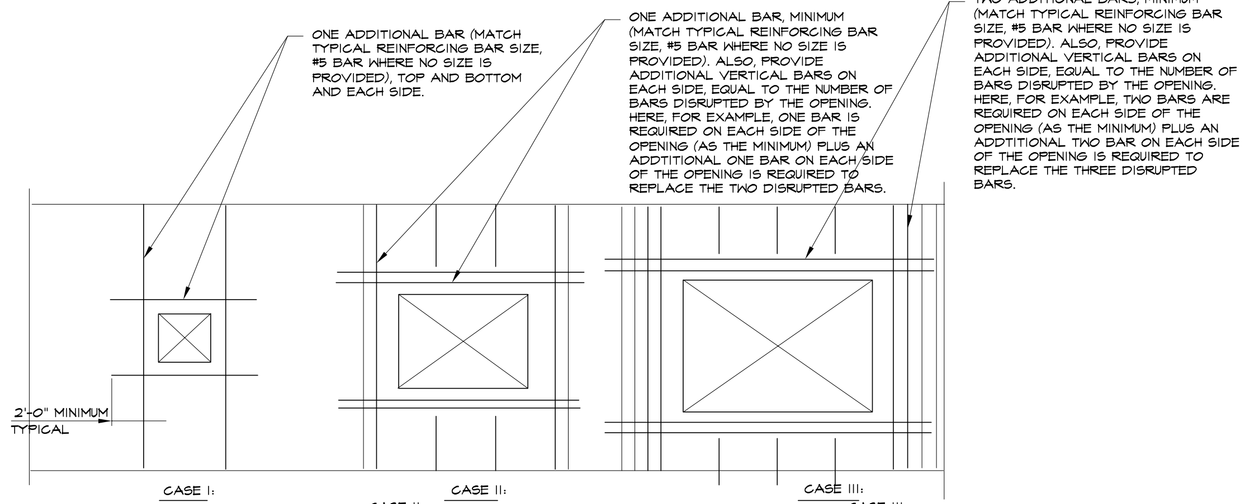

CASE I:
APPLIES TO (1) ALL OPENINGS IN NON-STRUCTURAL PARTITIONS AND (2) ANY OPENING 2'-0" OR LESS BOTH WAYS IN STRUCTURAL PARTITIONS OR EXTERIOR WALLS.

CASE II:
APPLIES TO ALL STRUCTURAL PARTITIONS AND EXTERIOR WALLS WHEN OPENING EXCEEDS 2'-0" BUT NOT MORE THAN 4'-0" IN EITHER DIRECTION.

CASE III:
APPLIES TO ALL STRUCTURAL PARTITIONS AND EXTERIOR WALLS WHEN OPENINGS GREATER THAN 4'-0" IN EITHER DIRECTION BUT LESS THAN 8'-0" IN EITHER DIRECTION.

NOTE: VERTICAL REINFORCEMENT OF 2 BARS, EACH BAR SHALL BE PLACED IN A SEPERATE CELL.
HORIZONTAL REINFORCEMENT OF 2 BARS, EACH BAR SHALL BE PLACED IN A SEPERATE LAYER.

Typical Masonry Wall Additional Reinforcement Requirements Around Masonry Openings Detail
7 S4-1 Scale: Not to Scale
Detail: AES4-10-113

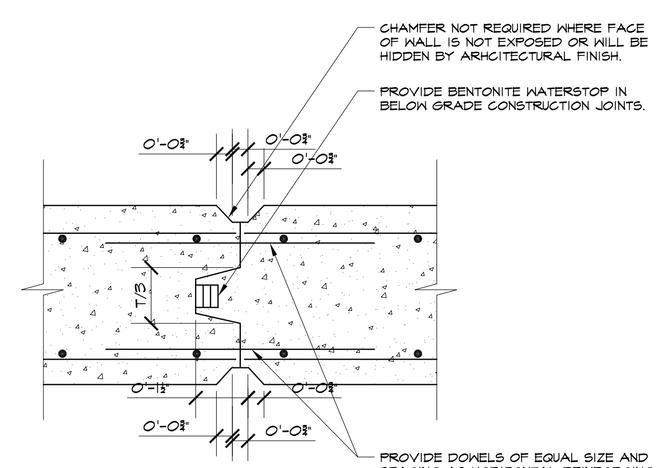

DETAIL ALSO APPLIES TO FOUNDATION WALLS AND CONTINUOUS WALL FOOTINGS.

Typical Concrete Wall Construction Joint Detail
4 S4-1 SCALE: NOT TO SCALE

TYPICAL DETAILS

SCALE: NOT TO SCALE

Architecturally Engineered
Structures, PLLC
Structural Engineering Consultants
www.AEStructures.com
1310 Stephenson Highway
Troy, Michigan 48098-6507
Telephone: 248.828.7264
Facsimile: 248.828.7265
AE STRUCTURES

Lindhout Associates architects aia pc
10465 citation drive, brighton, michigan 48116-9510
www.lindhout.com (810)227-5668 fax:(810)227-5855

Rand Construction
Designers*Engineers*Builders
1740 S. Staples Road, Brighton, MI 48116
(810) 229-5450 FAX (810) 229-7271
www.randconstruction.com

issued for
PERMITS
REVIEW
RE-VIEW
04/13/2006
04/12/2006
03/29/2006
date
dr: HV
ck'd: HV
app'd: HV

NEW CLASSROOM/GYMNASIUM ADDITION for:
FIRST BAPTIST CHURCH OF WIXOM
WIXOM, MICHIGAN
TYPICAL DETAILS

S4-1
0577

COPYRIGHT ©2004 LINDHOUT ASSOCIATES ARCHITECTS AIA PC