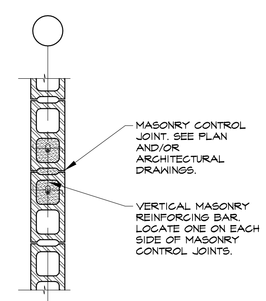

ARCHITECTURAL DRAWINGS TYPICALLY INDICATE MASONRY CONTROL JOINTS AND BRICK EXPANSION JOINTS. THE LOCATION OF ONE SHALL DEFINE THE OTHER, WHERE THERE IS NO INDICATION OF EITHER, THE CONTRACTOR SHALL, FOR BIDDING PURPOSES, PROVIDE MASONRY CONTROL JOINTS, AND BRICK EXPANSION JOINTS (WHERE REQUIRED), AT A SPACING NOT TO EXCEED 15'-0" ON CENTER. A MASONRY CONTROL JOINT AND/OR BRICK EXPANSION JOINT SHALL BE LOCATED WITHIN 2'-0" OF ALL CORNERS.

20 / S65.01 Typical Masonry Wall Control Joint Detail
Scale: Not to Scale
Detail: AES-4000-102

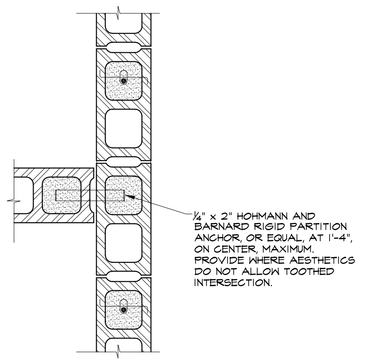

Special Typical Masonry Wall Intersection Detail
Scale: Not to Scale
Detail: AES-4000-103-ALT

STEEL LINTELS MAY ONLY BE USED WHEN ALLOWED BY ARCHITECTURAL DRAWINGS

MASONRY OPENING	STEEL LINTEL TYPE			
	4 INCH WALL	6 INCH WALL	8 INCH WALL	12 INCH WALL
UP TO 4'-0"	L3 1/2x3 1/2x1/4	WT 4x9	(2)L3 1/2x3 1/2x1/4	(3)L3 1/2x3 1/2x1/4 OR (2)L5x3 1/2x1/4 (LLH)
4'-2" TO 6'-0"	L3 1/2x3 1/2x1/4	WT 4x9	(2)L4x3 1/2x1/4	(3)L4x3 1/2x1/4 OR (2)L5x5x5/16
6'-2" TO 8'-0"	L5x3 1/2x5/16	WT 7x11	(2)L5x3 1/2x5/16	(3)L5x3 1/2x5/16 OR (2)L5x5x5/16
8'-2" TO 10'-0"	L6x3 1/2x3/8	WT 8x15	(2)L6x3 1/2x3/8	(3)L6x3 1/2x3/8 OR TS8x4x5/16+ 1/4" PLATE *
10'-2" TO 12'-0"	—	—	TS8x4x1/4+1/4" PLATE W/ 1/2" DIA. HEADED STUDS @ 16" O.C. *	TS8x4x3/8 + 1/4" PLATE *

* WELD PLATE TO TUBE 3/16"x3" @ 12" O.C. EACH SIDE.

NOTES:

1. ALL ANGLES ARE TO BE LONG LEG VERTICAL U.O.N..
2. PROVIDE MINIMUM 4 INCHES OF SOLID BEARING EACH END OF LINTEL.
3. SEE ARCH. FOR ALL MASONRY OPENINGS AND LINTEL CONFIGURATION.
4. TACK WELD ANGLES TOGETHER, EACH SIDE, 12" ON CENTER (MAXIMUM).
5. ALL MASONRY LINTELS NOTED HERE ARE NOT INTENDED TO SUPERCEDE TO SUPERCEDE THOSE INDICATED DIRECTLY ON DRAWINGS.

19 / S65.01 Typical Masonry Wall Steel Lintel Schedule
Scale: Not to Scale
Detail: AES-4000-111

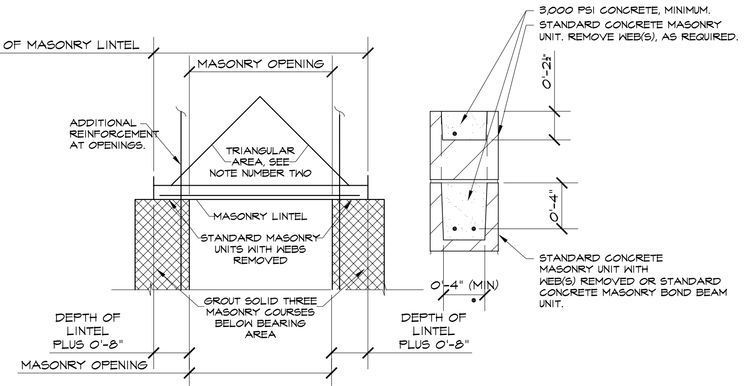

WALL WIDTH	LINTEL DEPTH	MASONRY OPENING					
		UP TO 4'-0"	4'-2" TO 6'-0"	6'-2" TO 8'-0"	8'-2" TO 10'-0"	10'-2" TO 12'-0"	12'-2" TO 14'-0"
8"	8"	2-#4	2-#5	2-#5	—	—	—
	16"	—	—	2-#4	2-#5	2-#6	2-#6
12"	8"	2-#4	2-#5	2-#5	—	—	—
	16"	—	—	2-#4	2-#5	2-#6	2-#7

NOTES:

1. PLACE REINFORCEMENT AT BOTTOM OF BOND BEAM, UON.
2. LINTELS DESIGNED FOR WALL LOADS OF TRIANGULAR AREA ABOVE LINTELS. HEIGHT OF TRIANGLE ABOVE LINTEL EQUALS 1/2 * MASONRY OPENING + 8"
3. SEE ARCHITECTURAL DRAWINGS FOR ALL MASONRY OPENINGS AND LINTEL CONFIGURATIONS.

16 / S65.01 Typical Masonry Wall Lintel Schedule - Concrete Masonry Lintels
Scale: Not to Scale
Detail: AES-4000-112

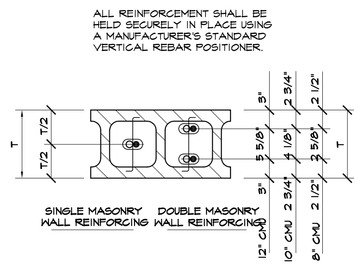

15 / S65.01 Typical Masonry Wall Reinforcement Detail
Scale: Not to Scale
Detail: AES-4000-101

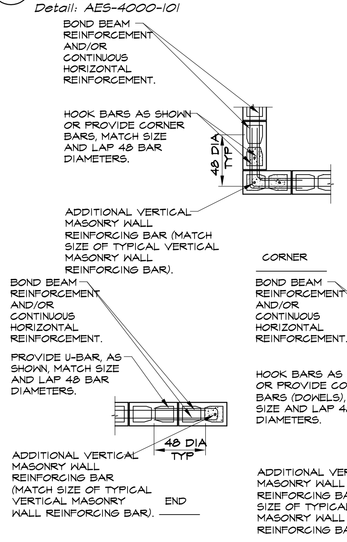

NOTES:

1. UNLESS OTHERWISE NOTED OR SPECIFIED, AT CORNERS AND INTERSECTIONS OF CONCRETE MASONRY WALLS SHALL BE CONSTRUCTED BY PLACING ONE HALF OF UNITS INTO THE OTHER MASONRY WALL WITH THE ALTERNATE UNITS HAVING A BEARING OF NOT LESS THAN FOUR INCHES ON THE UNIT BELOW.

2. UNLESS OTHERWISE NOTED OR SPECIFIED, PROVIDE DOWELS FROM CONCRETE FOOTING OR WALL BELOW WITH SAME SIZE AND SPACING AS VERTICAL BARS AT LEVEL BELOW. LAP FORTY-EIGHT BAR DIAMETERS MINIMUM, UON.

14 / S65.01 Typical Masonry Wall Additional Reinforcement Requirement Detail
Scale: Not to Scale
Detail: AES-4000-102

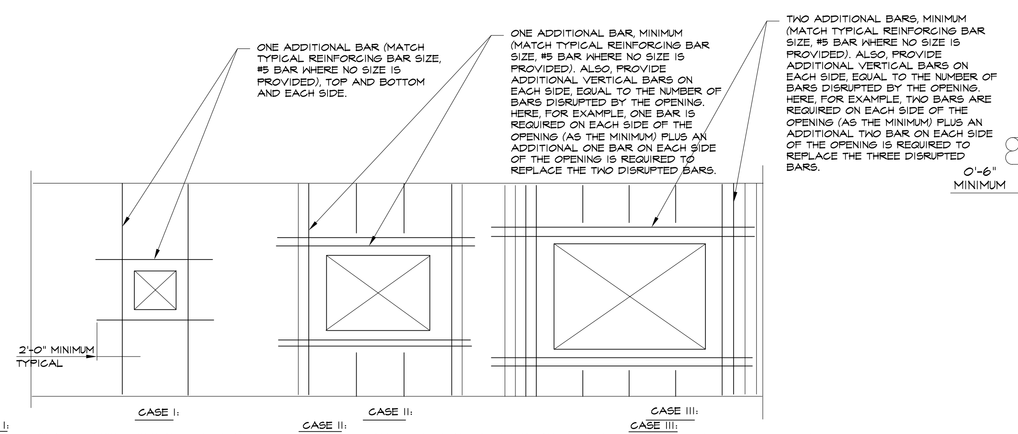

CASE I: APPLIES TO (1) ALL OPENINGS IN NON-STRUCTURAL PARTITIONS AND (2) ANY OPENING 2'-0" OR LESS BOTH WAYS IN STRUCTURAL PARTITIONS OR EXTERIOR WALLS.

CASE II: APPLIES TO ALL STRUCTURAL PARTITIONS AND EXTERIOR WALLS WHEN OPENING EXCEEDS 2'-0" BUT NOT MORE THAN 4'-0" IN EITHER DIRECTION.

CASE III: APPLIES TO ALL STRUCTURAL PARTITIONS AND EXTERIOR WALLS WHEN OPENINGS GREATER THAN 4'-0" IN EITHER DIRECTION BUT LESS THAN 8'-0" IN EITHER DIRECTION.

NOTE: VERTICAL REINFORCEMENT OF 2 BARS, EACH BAR SHALL BE PLACED IN A SEPARATE CELL. HORIZONTAL REINFORCEMENT OF 2 BARS, EACH BAR SHALL BE PLACED IN A SEPARATE LAYER.

13 / S65.01 Typical Masonry Wall Additional Reinforcement Requirements Around Masonry Openings Detail
Scale: Not to Scale
Detail: AES-4000-113

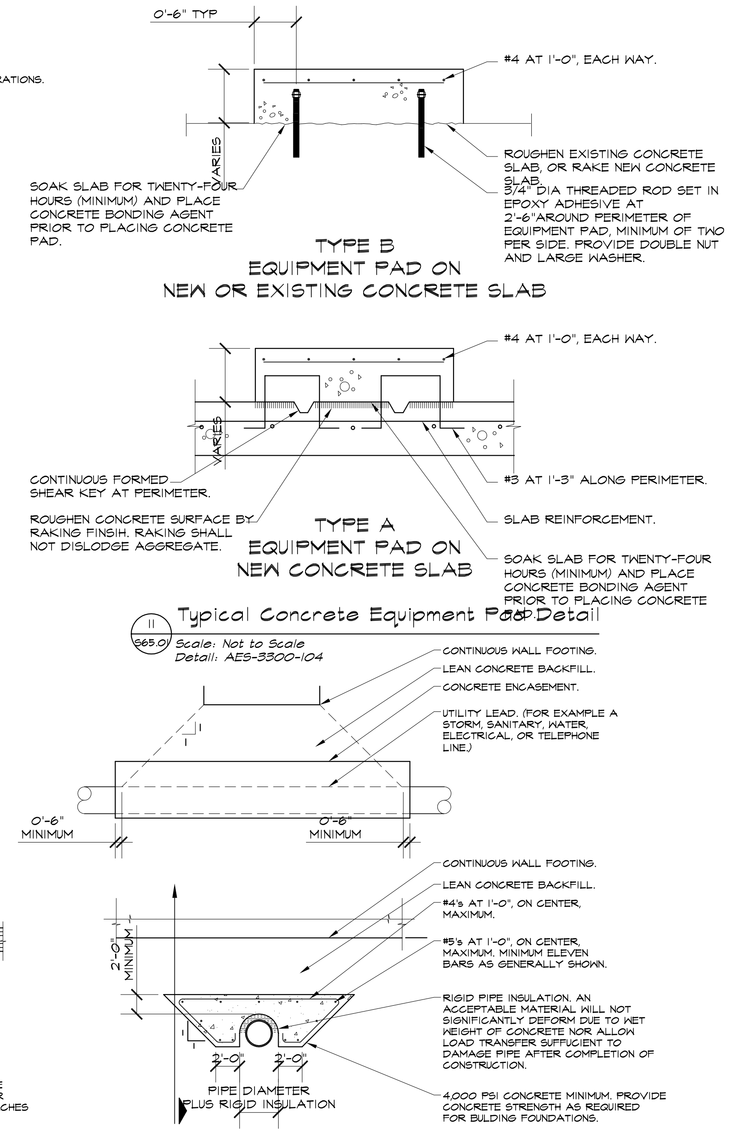

11 / S65.01 Typical Concrete Equipment Pad Detail
Scale: Not to Scale
Detail: AES-3300-104

Typical Building Utility Lead Protection Requirement Detail

10 / S65.01 Scale: Not to Scale
Detail: AES-3300-032

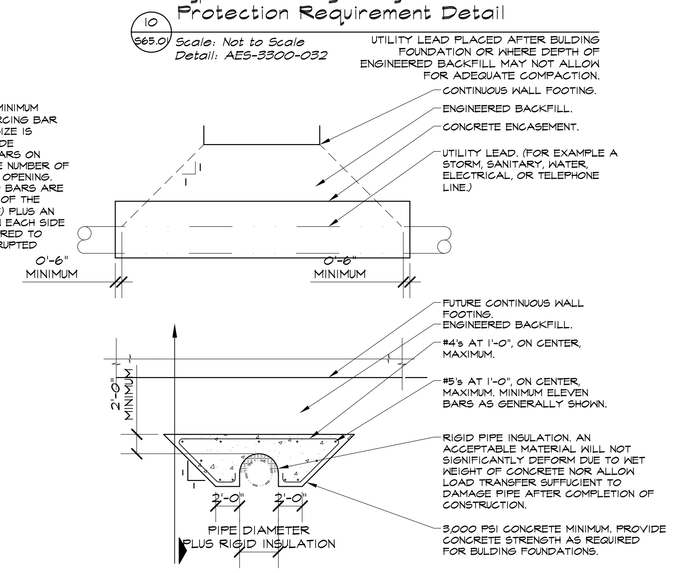

Typical Building Utility Lead Protection Requirement Detail

9 / S65.01 Scale: Not to Scale
Detail: AES-3300-031

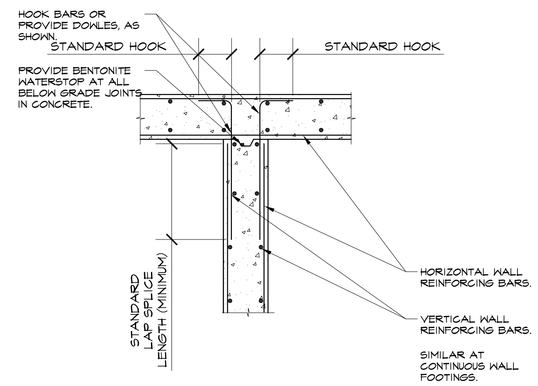

Typical Additional Reinforcement Requirements For Concrete Wall and Continuous Wall Footing Intersections

8 / S65.01 Scale: Not to Scale
Detail: AES-3300-124

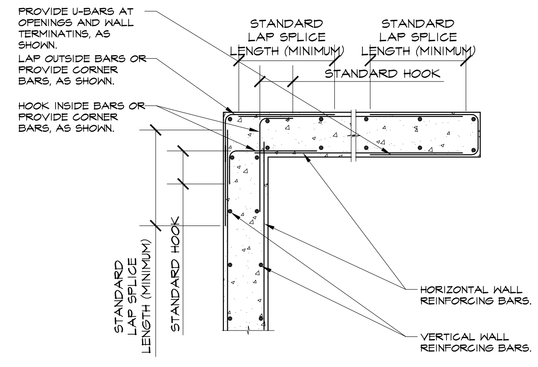

Typical Additional Reinforcement Requirements For Concrete Wall and Continuous Wall Footing Corners, Terminations, and Openings

7 / S65.01 Scale: Not to Scale
Detail: AES-3300-123

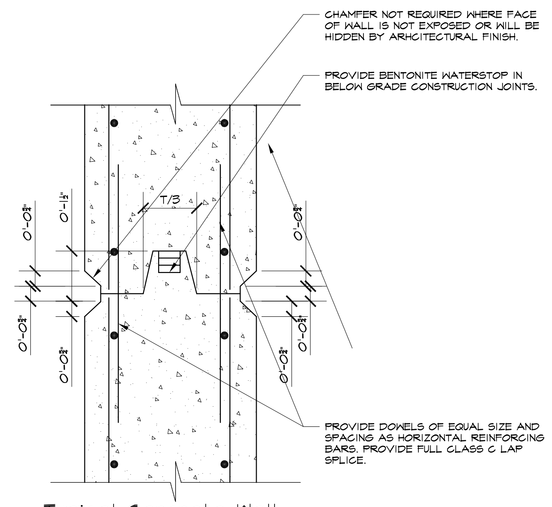

Typical Concrete Wall Horizontal Construction Joint Detail

6 / S65.01 Scale: Not to Scale
Detail: AES-3300-122

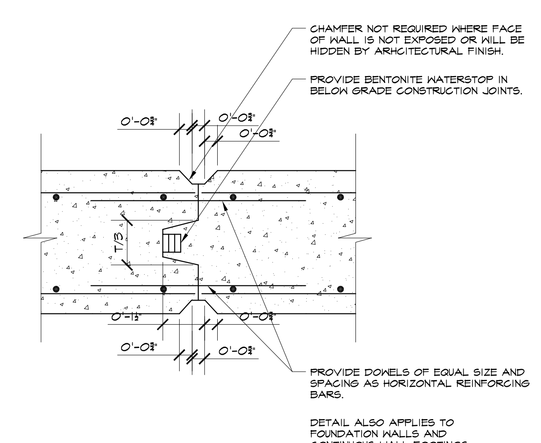

Typical Vertical Concrete Wall Construction Joint Detail

5 / S65.01 Scale: Not to Scale
Detail: AES-3300-121

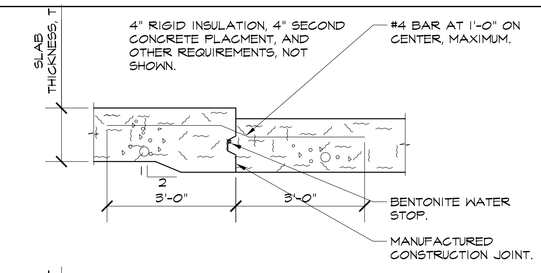

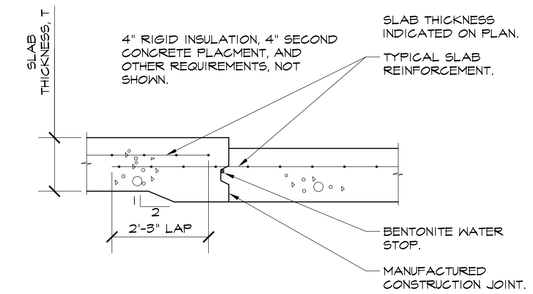

Typical Slab Depression

4 / S65.01 Scale: Not to Scale
Detail: AES-3300-105

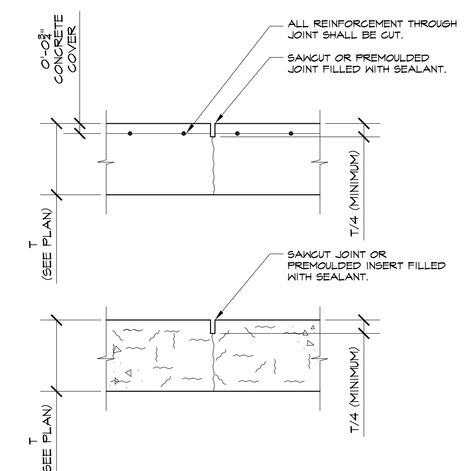

Typical Slab on Grade Contraction Joint Detail

3 / S65.01 Scale: Not to Scale
Detail: AES-3300-103

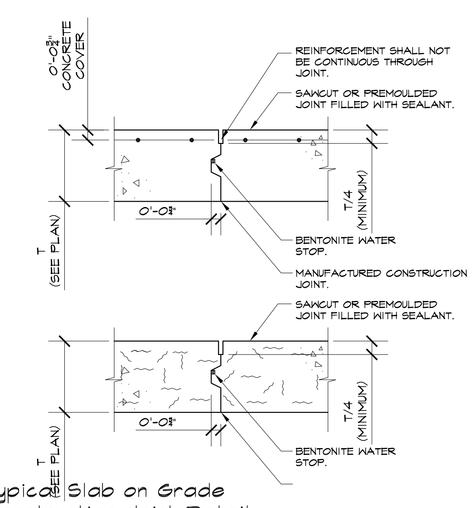

Typical Slab on Grade Construction Joint Detail

2 / S65.01 Scale: Not to Scale
Detail: AES-3300-102

TO ATTAIN THE SPECIFIED FLOOR COVERINGS, AND ASSOCIATED WARANTEES, THE VAPOR BARRIER MUST BE PLACED DIRECTLY BENEATH THE CONCRETE SLAB ON GRADE. PLACING THE VAPOR BARRIER AT THIS LOCATION INCREASES THE POTENTIAL FOR "CURLING." NOTE, THE POTENTIAL FOR CURLING DOES NOT MEAN CURLING WILL OCCUR. THE CONTRACTOR SHALL RECOGNIZE THIS AND PLAN AND PLACE AND CURE THE CONCRETE SLAB ON GRADE IN SUCH A WAY AS TO ELIMINATE CURLING. CURLED SLABS ARE SUBJECT TO REMOVAL AND REPLACEMENT.

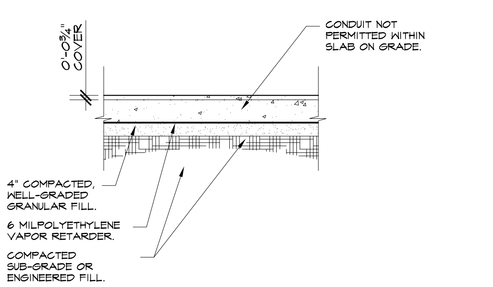

AT WALLS, PIERS, COLUMNS, OR OTHER VERTICAL INTERRUPTIONS, LAP VAPOR BARRIER AND SPLICE AT VERTICAL INTERRUPTIONS AND PROVIDE VAPOR-TIGHT SEAL. TURN VAPOR BARRIER UP AT WALLS, USE ADHESIVE OR MASTIC AT SPLICES AND VERTICAL INTERRUPTIONS SURFACES TO ACHIEVE VAPOR-TIGHT SEAL.

1 / S65.01 Typical Slab on Grade Detail
Scale: Not to Scale
Detail: AES-3300-101

PRIME DESIGN SYSTEMS, INC.
ARCHITECTURE INTERIORS PLANNING GRAPHICS
2397 OLD KENT ROAD WARREN, MICHIGAN 48091 248-540-1711 FAX 248-540-3856 E-MAIL PDSGFX@MSN.COM

Architecturally Engineered
Structural Engineering
Mechanical Engineering
www.AESstructures.com
1111 Rochester Road
Troy, Michigan 48098-6067
Telephone: 248.250.7106
Facsimile: 248.250.7107
AE STRUCTURES

PROPOSED SPORTS FACILITY, ET AL
KOTOWN TECHNOLOGY AND SPORTS FACILITY
CITY OF ROMULUS, WAYNE COUNTY, MICHIGAN
TYPICAL DETAILS - AREA SIX

PROJECT
05/0997

DATE
December 29, 2006

REVISIONS
December Review

SHEET
S65.01

COPYRIGHT © 2006 PRIME DESIGN SYSTEMS, INC. THIS DOCUMENT AND THE SUBJECT MATTER CONTAINED THEREIN IS PROPRIETARY AND IS NOT TO BE USED OR REPRODUCED WITHOUT PRIOR WRITTEN APPROVAL.

DATE PLOTTED: 01.02.2007 TIME PLOTTED: 16:12:44