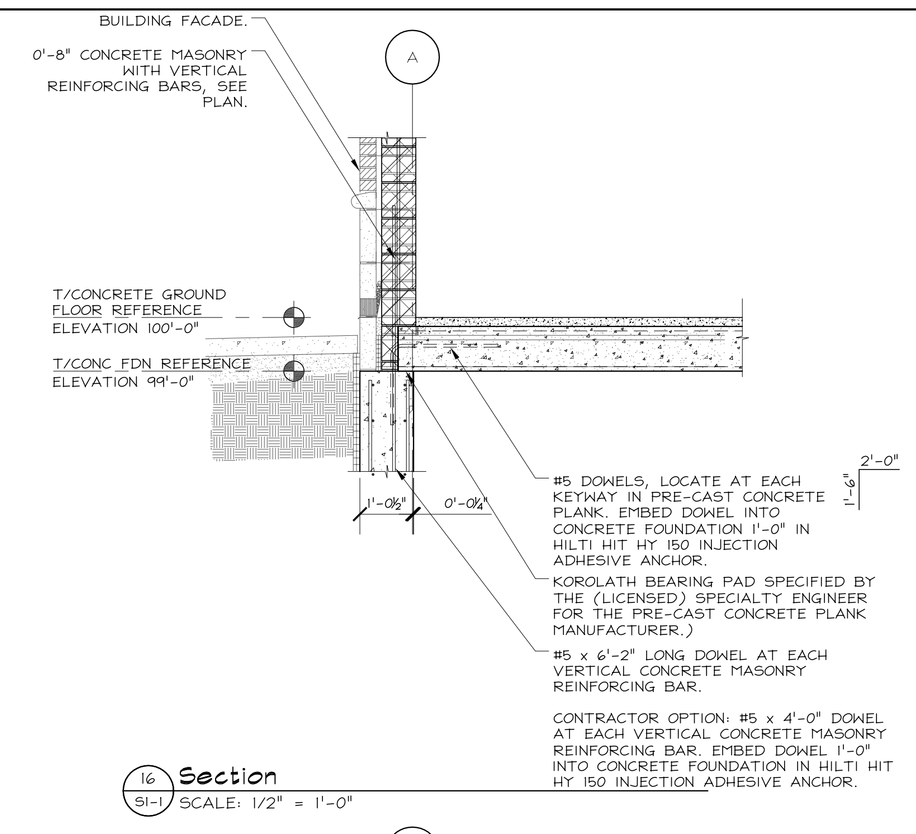

16 Section
S1-1 SCALE: 1/2" = 1'-0"

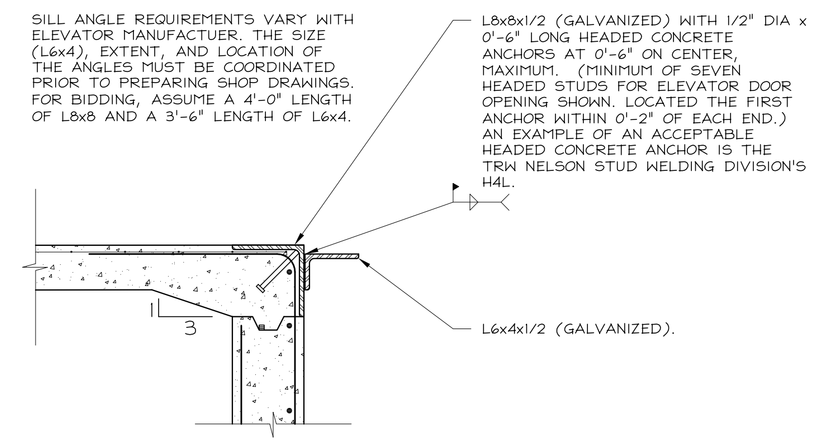

12 Section
S3-1 SCALE: 1" = 1'-0"

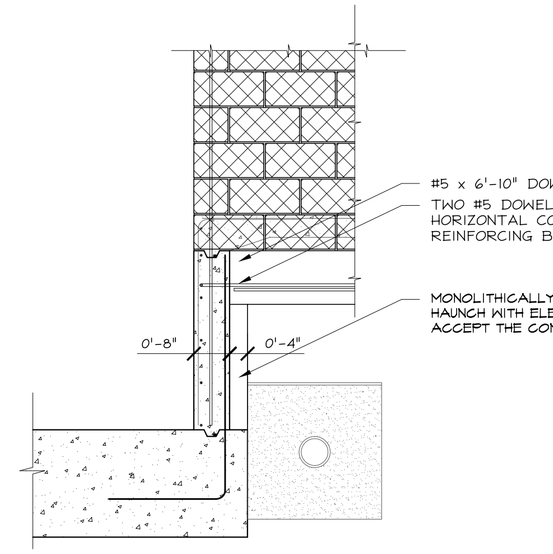

8 Section
S1-1 SCALE: 1/2" = 1'-0"

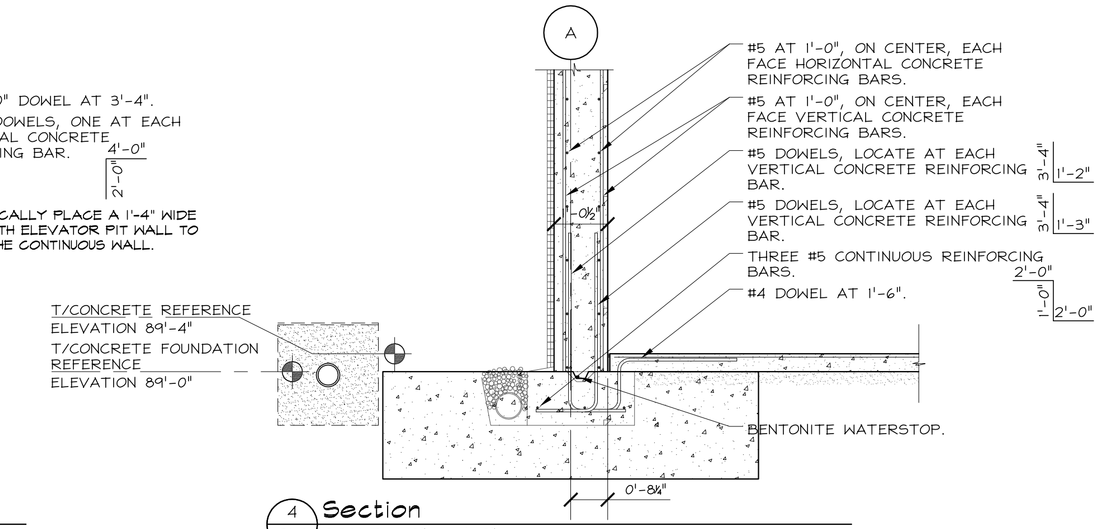

4 Section
S1-1 SCALE: 1/2" = 1'-0"

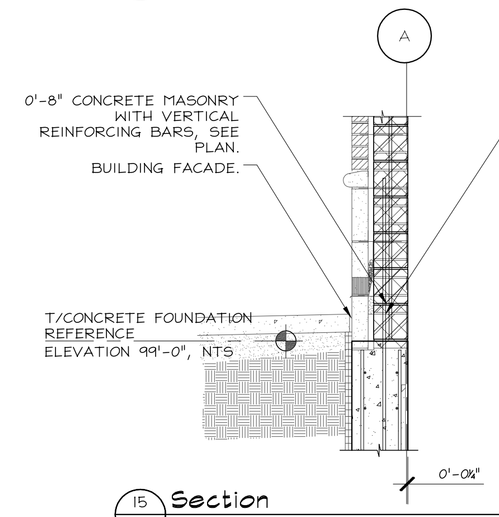

15 Section
S1-1 SCALE: 1/2" = 1'-0"

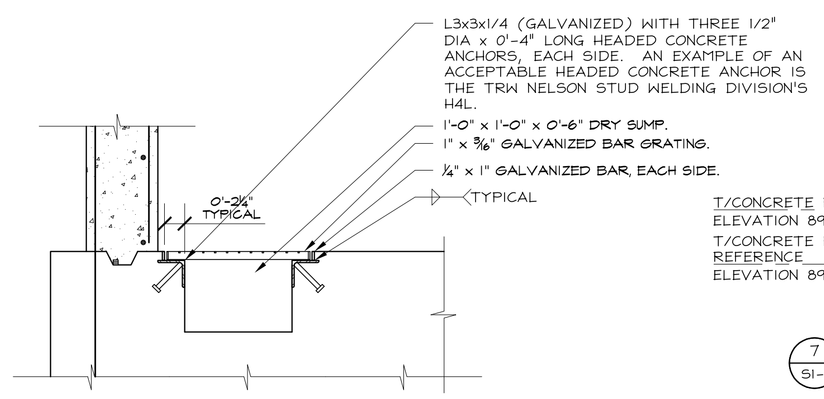

11 Section
S1-1 SCALE: 1" = 1'-0"

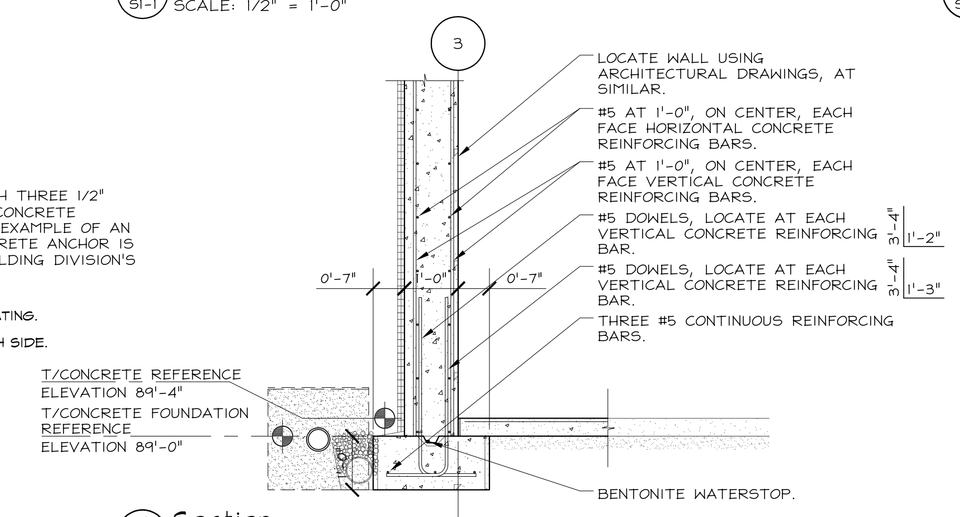

7 Section
S1-1 SCALE: 1/2" = 1'-0"

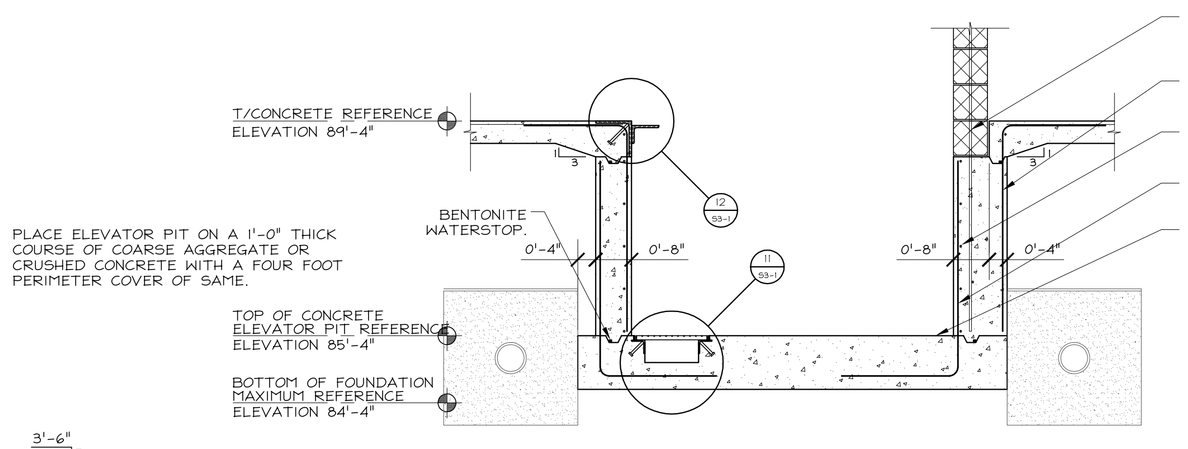

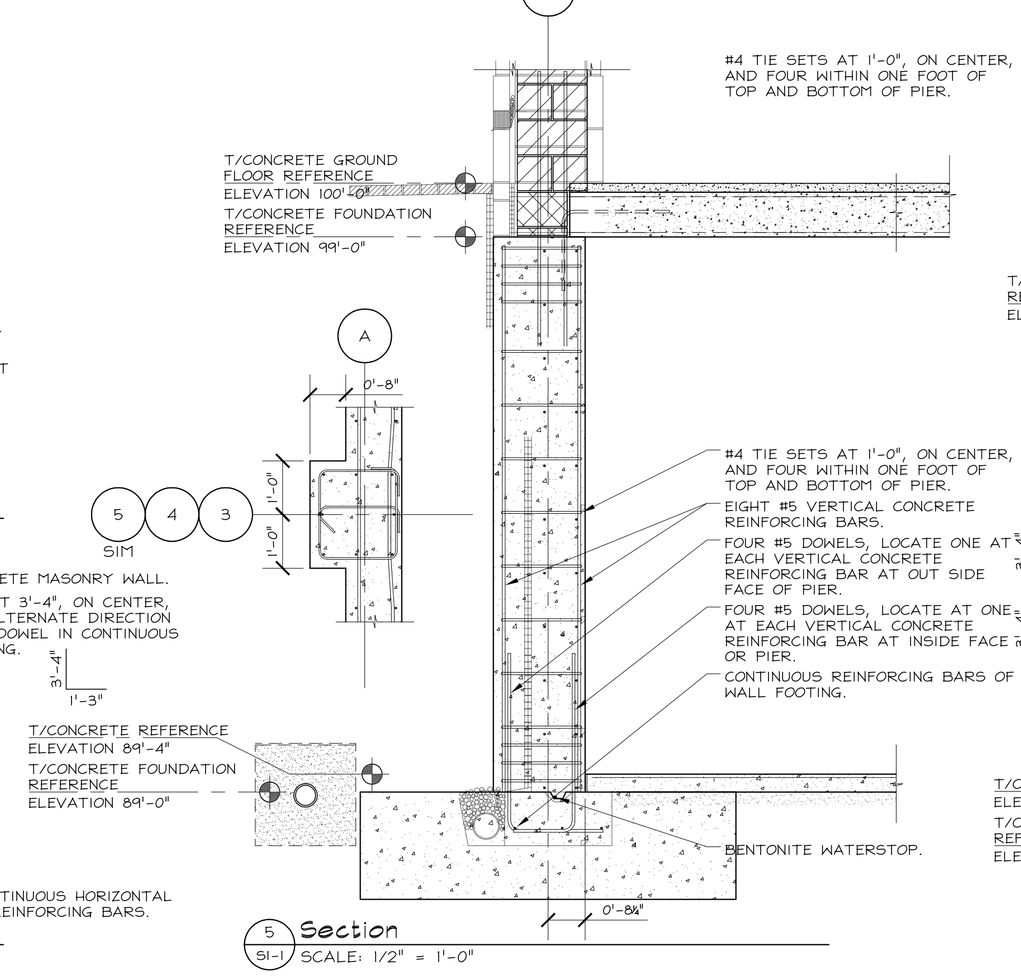

10 Section
S1-1 SCALE: 1/2" = 1'-0"

5 Section
S1-1 SCALE: 1/2" = 1'-0"

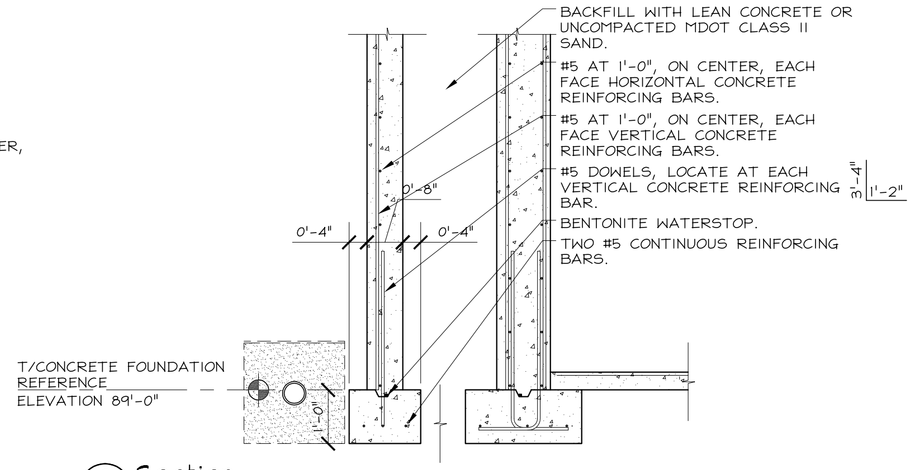

2 Section
S1-1 SCALE: 1/2" = 1'-0"

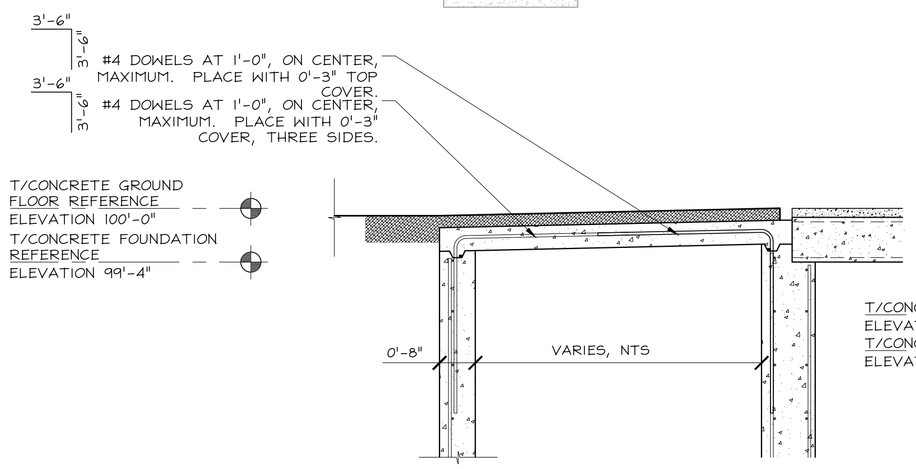

13 Section
S1-1 SCALE: 1/2" = 1'-0"

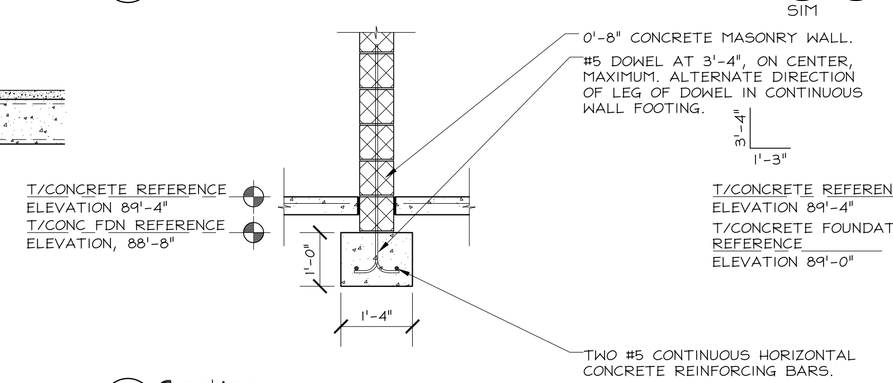

9 Section
S1-1 SCALE: 1/2" = 1'-0"

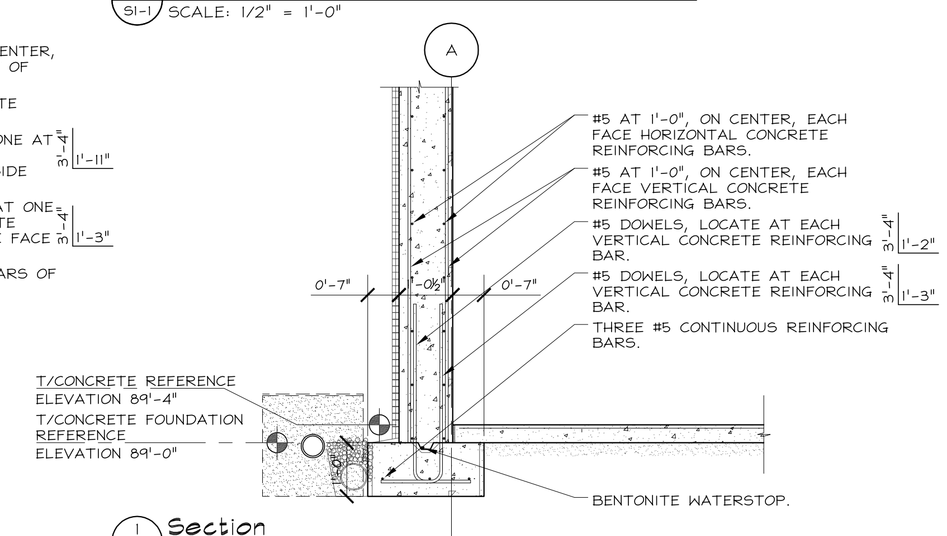

1 Section
S1-1 SCALE: 1/2" = 1'-0"

SCHEDULES AND DETAILS

SCALE: NOT OT SCALE

THIS DOCUMENT AND THE SUBJECT MATTER CONTAINED THEREIN IS PROPRIETARY AND IS NOT TO BE USED OR REPRODUCED WITHOUT PRIOR WRITTEN APPROVAL
COPYRIGHT © 2004 LINDHOUT ASSOCIATES ARCHITECTS AIA PC

DATE PLOTTED: 23 May 2006 TIME PLOTTED: 3:40pm FILE LOCATION: lao-2005-03-s3-1.dwg

Lindhout Associates architects aia pc
10465 citation drive, brighton, michigan 48116-9510
www.lindhout.com (810)227-5668 fax:(810)227-5855

Architectually Engineered Structures, LLC
Structural Engineering Consultants
www.AEStructures.com
1118 joshua Drive
Troy, Michigan 48098-6507
Telephone:248.828.7265
Facsimile:248.828.7265

issued for	date	
BID PACK ONE SECOND REVIEW REVIEW	05.03.2006 03.24.2006 03.17.2006	dr: HV ck'd: HV app'd: HV

NEW RESTAURANT AND OFFICE for:
SBT, LLC
BRIGHTON, MICHIGAN

SECTIONS AND DETAILS

S3-1

0512