THIS DOCUMENT AND THE SUBJECT MATTER CONTAINED THEREIN IS PROPRIETARY AND IS NOT TO BE USED OR REPRODUCED WITHOUT PRIOR WRITTEN APPROVAL

COPYRIGHT © 2004 LINDHOUT ASSOCIATES ARCHITECTS AIA PC

DATE PLOTTED: 08 May 2006 TIME PLOTTED: 9:49am FILE LOCATION: lao-2005-03-s4-2.dwg

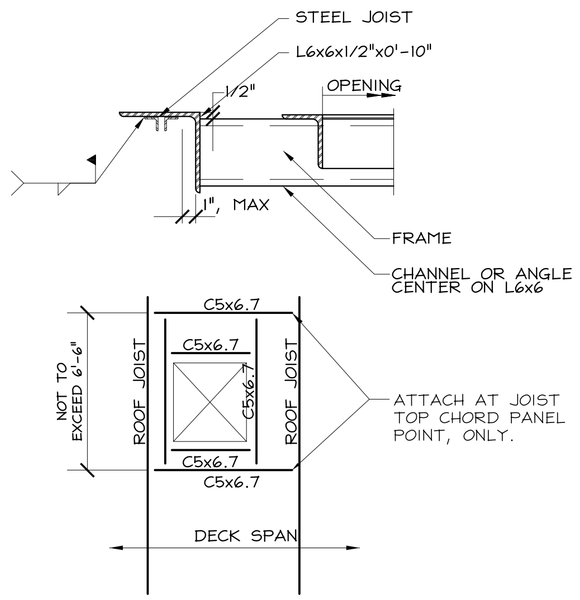

12 Typical Roof Opening Detail
S4-2 Scale: Not to Scale

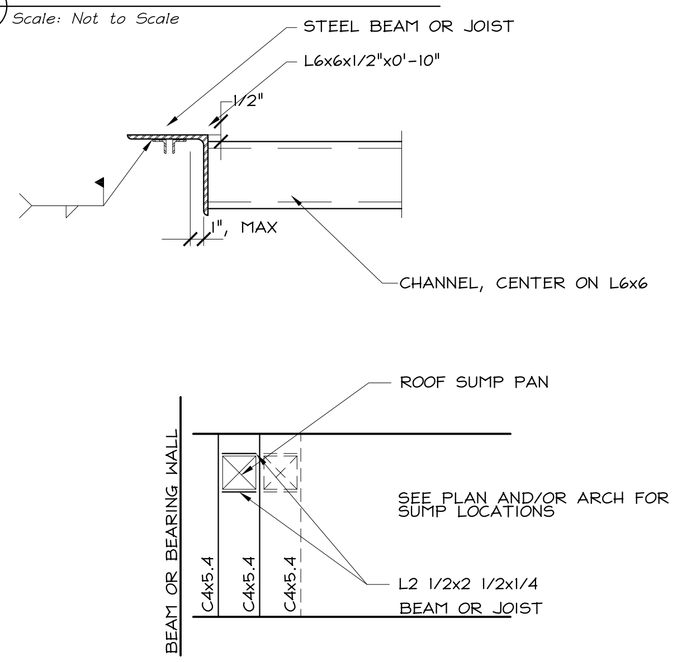

11 Typical Roof Sump Detail
S4-2 Scale: Not to Scale

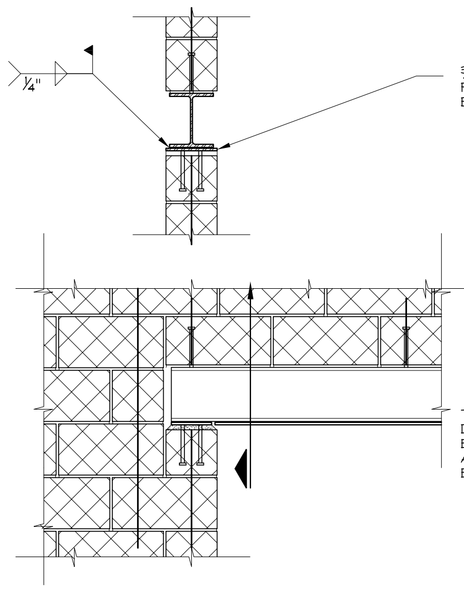

9 Steel Lintel Bearing Detail
S4-2 SCALE: 3/4" = 1'-0"

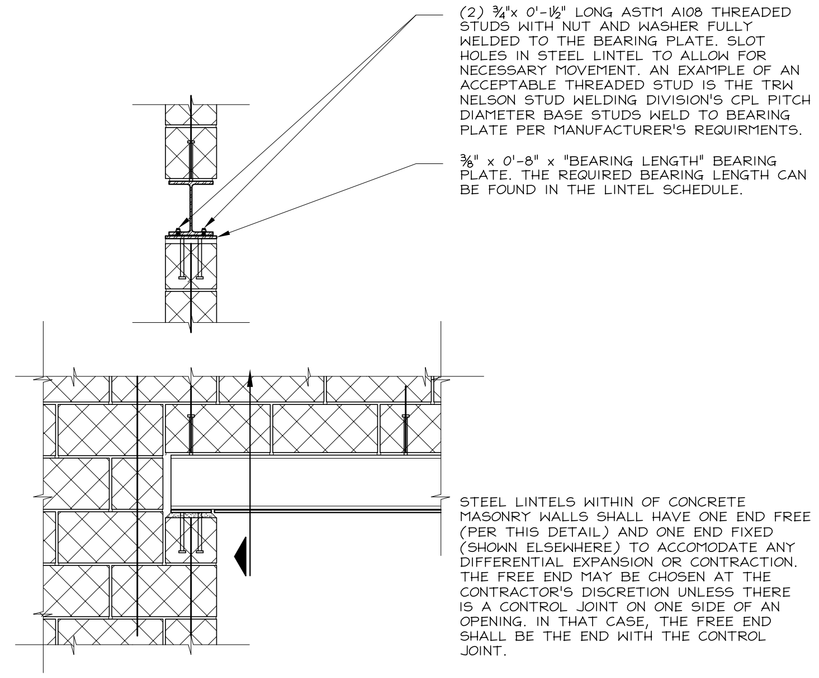

8 Steel Lintel Expansion/Contraction Accomodating Attachment Detail
S4-2 SCALE: 3/4" = 1'-0"

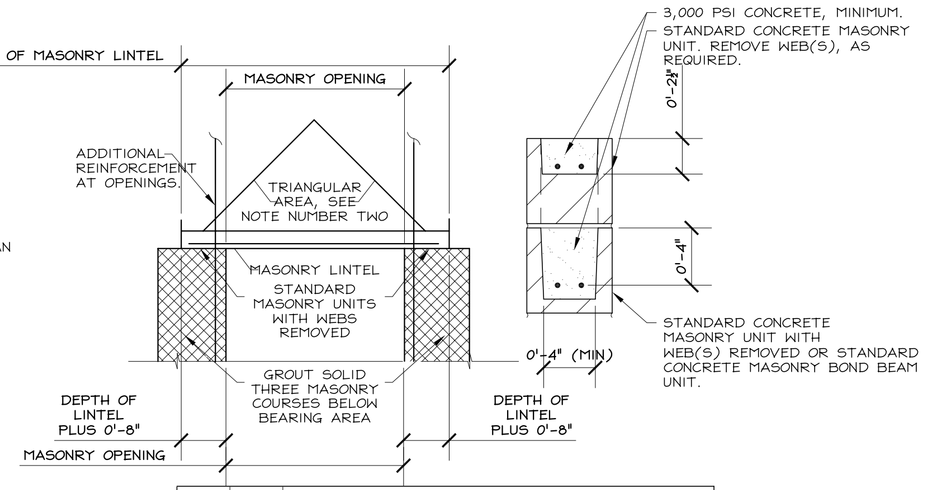

WALL WIDTH	LINTEL DEPTH	MASONRY OPENING					
		UP TO 4'-0"	4'-2" TO 6'-0"	6'-2" TO 8'-0"	8'-2" TO 10'-0"	10'-2" TO 12'-0"	12'-2" TO 14'-0"
8"	8"	2-#4	2-#5	2-#5	—	—	—
	16"	—	—	2-#4	2-#5	2-#6	2-#6
12"	8"	2-#4	2-#5	2-#5	—	—	—
	16"	—	—	2-#4	2-#5	2-#6	2-#7

NOTES:

1. PLACE REINFORCMENT AT BOTTOM OF BOND BEAM, UON.
2. LINTELS DESIGNED FOR WALL LOADS OF TRIANGULAR AREA ABOVE LINTELS. HEIGHT OF TRIANGLE ABOVE LINTEL EQUALS 1/2 " MASONRY OPENING + 8"
3. SEE ARCHITECTURAL DRAWINGS FOR ALL MASONRY OPENINGS AND LINTEL CONFIGURATIONS.

6 Typical Masonry Wall Lintel Schedule - Concrete Masonry Lintels
S4-2 Scale: Not to Scale
Detail: AES-4000-112

MASONRY OPENING	STEEL LINTEL TYPE			
	4 INCH WALL	6 INCH WALL	8 INCH WALL	12 INCH WALL
UP TO 4'-0"	L3 1/2x3 1/2x1/4	WT 4x9	(2)L3 1/2x3 1/2x1/4	(3)L3 1/2x3 1/2x1/4 OR (2)L5x3 1/2x1/4 (LLH)
4'-2" TO 6'-0"	L3 1/2x3 1/2x1/4	WT 4x9	(2)L4x3 1/2x1/4	(3)L4x3 1/2x1/4 OR (2)L5x5x5/16
6'-2" TO 8'-0"	L5x3 1/2x5/16	WT 7x11	(2)L5x3 1/2x5/16	(3)L5x3 1/2x5/16 OR (2)L5x5x5/16
8'-2" TO 10'-0"	L6x3 1/2x3/8	WT 8x13	(2)L6x3 1/2x3/8	(3)L6x3 1/2x3/8 OR T5Bx4x5/16+ 1/4" PLATE *
10'-2" TO 12'-0"	—	—	T5Bx4x1/4+1/4" PLATE W/ 1/2" DIA. HEADED STUDS @ 16" O.C. *	T5Bx4x3/8 + 1/4" PLATE *

* WELD PLATE TO TUBE 3/16"x3" @ 12" O.C. EACH SIDE.

NOTES:

1. ALL ANGLES ARE TO BE LONG LEG VERTICAL U.O.N..
2. PROVIDE MINIMUM 4 INCHES OF SOLID BEARING EACH END OF LINTEL.
3. SEE ARCH. FOR ALL MASONRY OPENINGS AND LINTEL CONFIGURATION.
4. TACK WELD ANGLES TOGETHER, EACH SIDE, 12" ON CENTER (MAXIMUM).
5. ALL MASONRY LINTELS NOTED HERE ARE NOT INTENDED TO SUPERCEDE TO SUPERCEDE THOSE INDICATED DIRECTLY ON DRAWINGS.

5 Typical Masonry Wall Steel Lintel Schedule
S4-2 Scale: Not to Scale
Detail: AES-4000-111

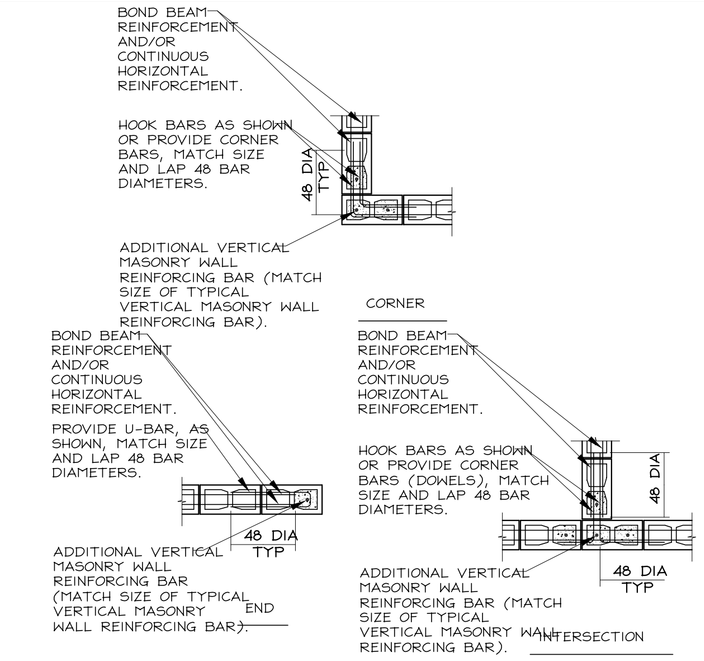

NOTES:

1. UNLESS OTHERWISE NOTED OR SPECIFIED, AT CORNERS AND INTERSECTIONS OF CONCRETE MASONRY WALLS SHALL BE CONSTRUCTED BY PLACING ONE HALF OF UNITS INTO THE OTHER MASONRY WALL WITH THE ALTERNATE UNITS HAVING A BEARING OF NOT LESS THAN FOUR INCHES ON THE UNIT BELOW.

2. UNLESS OTHERWISE NOTED OR SPECIFIED, PROVIDE DOWELS FROM CONCRETE FOOTING OR WALL BELOW WITH SAME SIZE AND SPACING AS VERTICAL BARS AT LEVEL BELOW. LAP FORTY-EIGH BAR DIAMETERS MINIMUM, UON.

3 Typical Masonry Wall Additional Reinforcment Requirement Detail
S4-2 Scale: Not to Scale
Detail: AES-4000-102

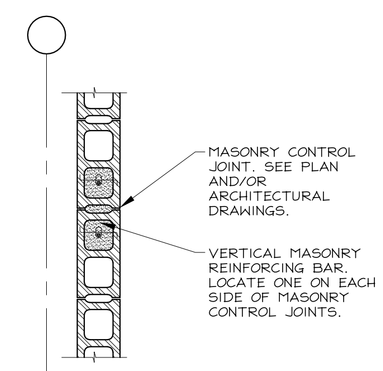

ARCHITECTURAL DRAWINGS TYPICALLY INDICATE MASONRY CONTROL JOINTS AND BRICK EXPANSION JOINTS. THE LOCATION OF ONE SHALL DEFINE THE OTHER. WHERE THERE IS NO INDICATION OF EITHER, THE CONTRACTOR SHALL, FOR BIDDING PURPOSES, PROVIDE MASONRY CONTROL JOINTS, AND BRICK EXPANSION JOINTS (WHERE REQUIRED), AT A SPACING NOT TO EXCEED 15'-0" ON CENTER. A MASONRY CONTROL JOINT AND/OR BRICK EXPANSION JOINT SHAL BE LOCATED WITHIN 2'-0" OF ALL CORNERS.

2 Typical Masonry Wall Control Joint Detail
S4-2 Scale: Not to Scale
Detail: AES-4000-102

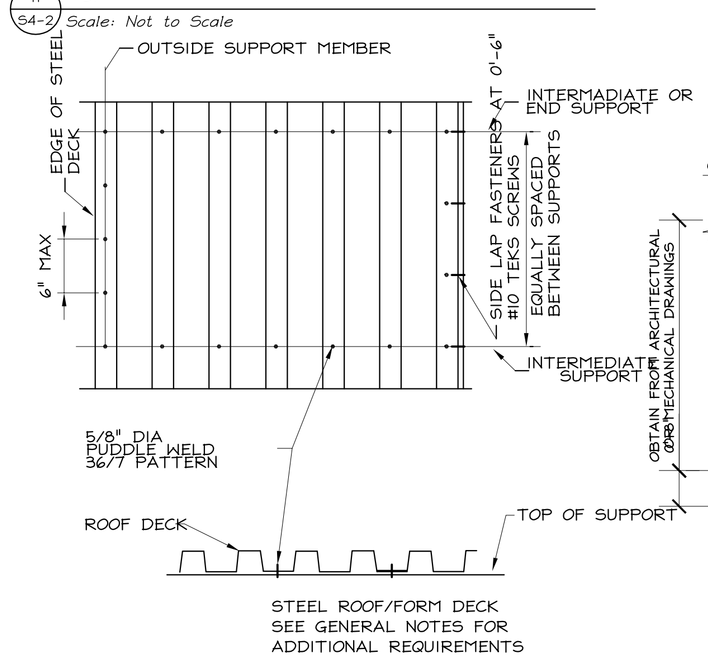

10 Typical Steel Deck Attachment Detail
S4-2 Scale: Not to Scale

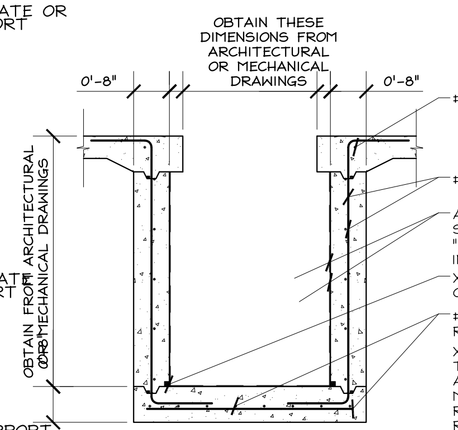

9 Typical Sump Pit Detail
S4-2 Scale: Not to Scale

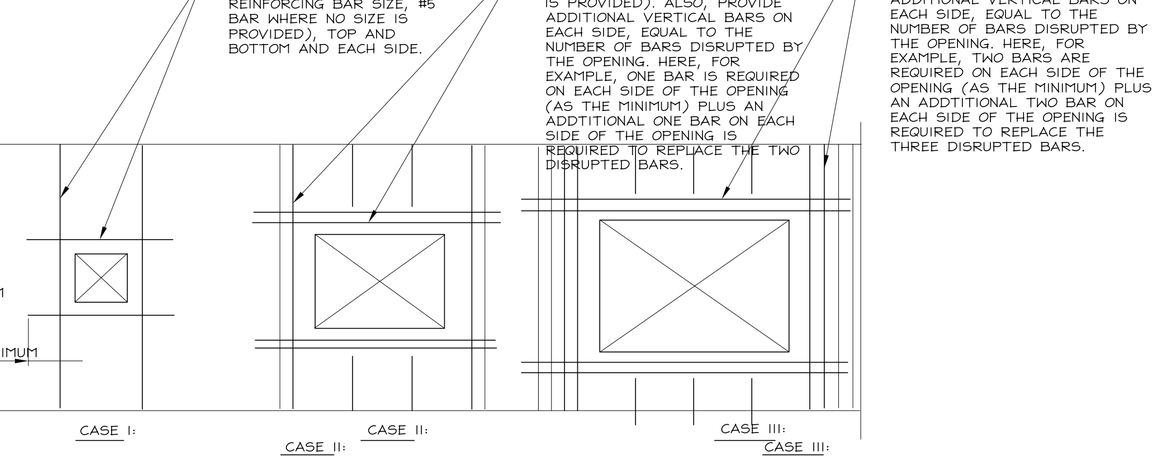

CASE I:
APPLIES TO (1) ALL OPENINGS IN NON-STRUCTURAL PARTITIONS AND (2) ANY OPENING 2'-0" OR LESS BOTH WAYS IN STRUCTURAL PARTITIONS OR EXTERIOR WALLS.

CASE II:
APPLIES TO ALL STRUCTURAL PARTITIONS AND EXTERIOR WALLS WHEN OPENING EXCEEDS 2'-0" BUT NOT MORE THAN 4'-0" IN EITHER DIRECTION.

CASE III:
APPLIES TO ALL STRUCTURAL PARTITIONS AND EXTERIOR WALLS WHEN OPENINGS GREATER THAN 4'-0" IN EITHER DIRECTION BUT LESS THAN 8'-0" IN EITHER DIRECTION.

NOTE: VERTICAL REINFORCEMENT OF 2 BARS, EACH BAR SHALL BE PLACED IN A SEPERATE CELL.
HORIZONTAL REINFORCEMENT OF 2 BARS, EACH BAR SHALL BE PLACED IN A SEPERATE LAYER.

4 Typical Masonry Wall Additional Reinforcement Requirements Around Masonry Openings Detail
S4-2 Scale: Not to Scale
Detail: AES-4000-113

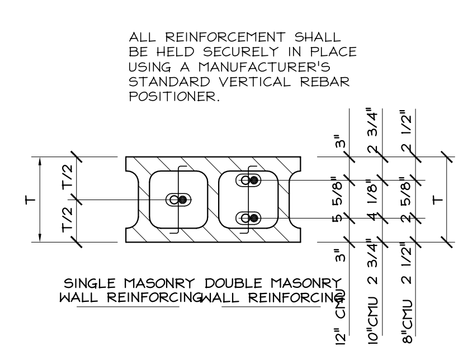

1 Typical Masonry Wall Reinforcement Detail
S4-2 Scale: Not to Scale
Detail: AES-4000-101

TYPICAL DETAILS

SCALE: NOT OT SCALE

Lindhout Associates architects aia pc
10465 citation drive, brighton, michigan 48116-9510
www.lindhout.com (810)227-5668 fax:(810)227-5855

Architectually Engineered Structures, Structural Steel Consultants
www.AEStructures.com
1118 joshua Drive
Troy, Michigan 48098-6507
Telephone:248.828.7264
Facsimile:248.828.7265

issued for
BID PACK ONE SECOND REVIEW REVIEW
05.09.2006
03.24.2006
03.10.06
date

dr: MV
ck'd: MV
app'd: MV

NEW RESTAURANT AND OFFICE for:
SBT, LLC
BRIGHTON, MICHIGAN
TYPICAL DETAILS

S4-2
0512